California Polytechnic State University Pomona
DEPARTMENT OF ELECTRICAL & COMPUTER ENGINEERING

# Circuit Analysis 2 Laboratory

ECE 2101L-03
Report #2

# Capacitors and Inductors with DC Sources Review

Prepared by
Kevyn Santos & Kaung Nyi Naing

Presented to
Sasoun Torousian

February 15, 2024

## Introduction:

In this lab, we will analyze the behaviors of capacitors and inductors in different scenarios. We will charge and discharge capacitors and calculate the initial voltages across each of the capacitors to see if the theoretical values match our experimental values. We will also do similar calculation and experimentation for inductors in order to confirm their behavior theoretically and experimentally. In order to calculate the theoretical values of these circuits, we will use thevenien equivalent circuits, and steady state assumptions such as a capacitor becoming an open circuit and the inductor turning into a short.

**Theory:**

The time constant of a capacitor is **τ = RC**

The time constant of a inductor is **τ = L/R**

The steady state is reached when the time reaches five tau for both componenets.

## A. Pre-Lab Section:

1. A series RC circuit has a resistance of 1.0Mohm and a capacitance of 4.7 uF What is the time constant?

   The time constant $\tau = RC$. So $\tau = (1 * 10^{6})(4.7 * 10^{-6}) = 4.7\, sec$

2. Determine how long it takes the capacitor to reach full charge for each of the following combinations:
   a. R = 47 ohm, C = 47 uF

      $\tau = RC = (47)(47 * 10^{-6}) = 2.209 * 10^{-4}\, sec$. For the capacitor to reach full charge do 5 times the time constant. $5\tau = 0.0011045\, sec$.

   b. R = 4.7 Mohm, C = 10 pF

      $\tau = RC = (4.7 * 10^{6})(10 * 10^{-12}) = 4.7 * 10^{-5} sec$. For the capacitor to reach full charge do 5 times the time constant. $5\tau = 2.35 * 10^{-4}\, sec$.

3. A series RL circuit has a resistance of 1.0 Kohm and an inductance of 1.0 mH. What is the time constant?

   In an RL circuit you the time constant $\tau = \frac{L}{R}$. $\tau = \frac{0.001}{1000} = 1 * 10^{-6}\, sec$

## Capacitor Circuit

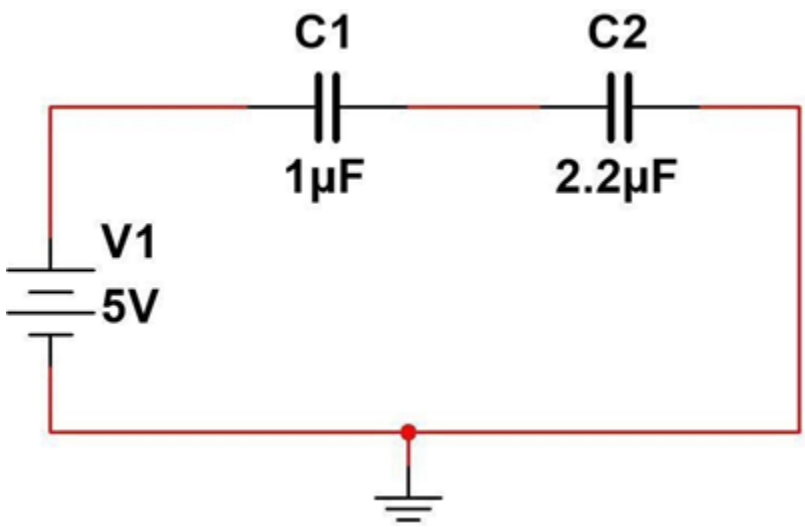


**Figure 1.1**

| Pairing | Theory | Experimental | Deviation |
|---|---|---|---|
| 1 µF series 2.2 µF | 0.6875micro | N/A | N/A |
| 1 µF parallel 2.2 µF | 3.2micro | N/A | N/A |

**Table 1.1**

| Voltage | Theory | Experimental | Deviation |
|---|---|---|---|
| $V_{C1}$ | 3.4375 | 3.323 | 3.33% |
| $V_{C2}$ | 1.5625 | 1.541 | 1.376% |

**Table 1.2**

**RL Circuit**

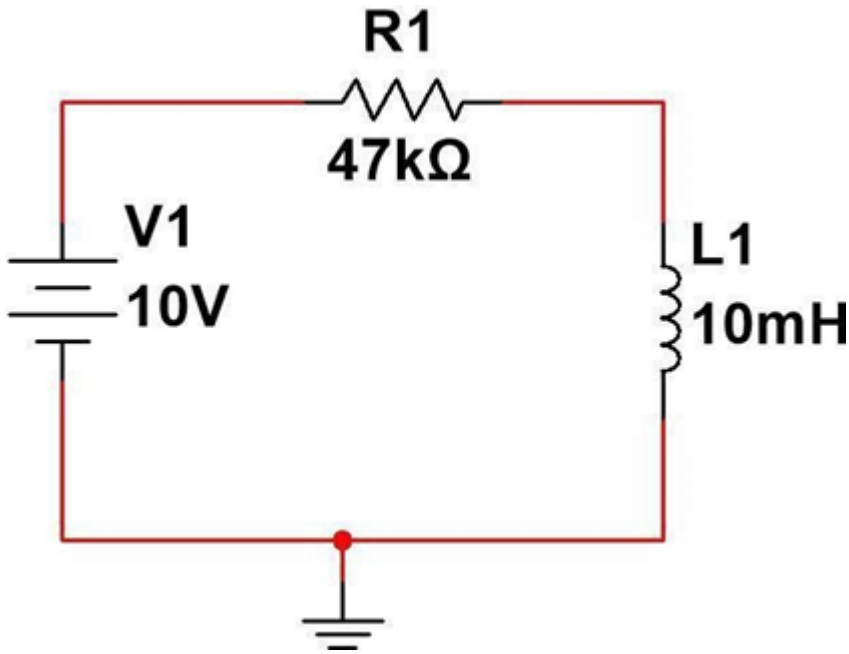


Inductor resistance = 78Ohms

**Figure 1.2**

| T | $V_L$ Theory | $V_L$ Experimental | Deviation |
|---|---|---|---|
| 2.1276e-07 | 16.6mV | 16.22mV | 2.29% |

**Table 1.3**

**RC Circuit**

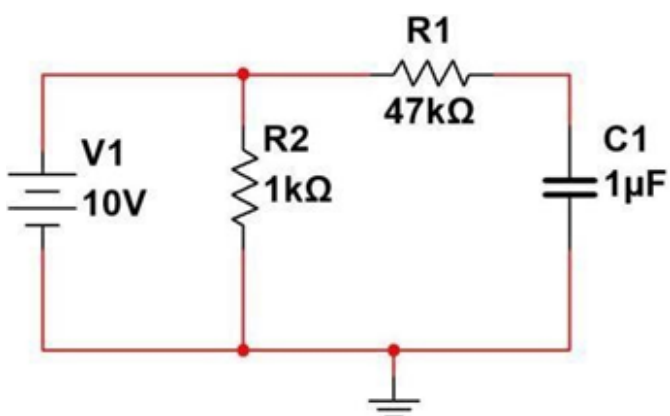


**Figure 1.3**

| T | $V_C$ Theory | $V_C$ Experimental | Deviation |
|---|---|---|---|
| 0.047 sec | 10V | 9.9 V | 1% |

**RC Circuit (long time constant)**

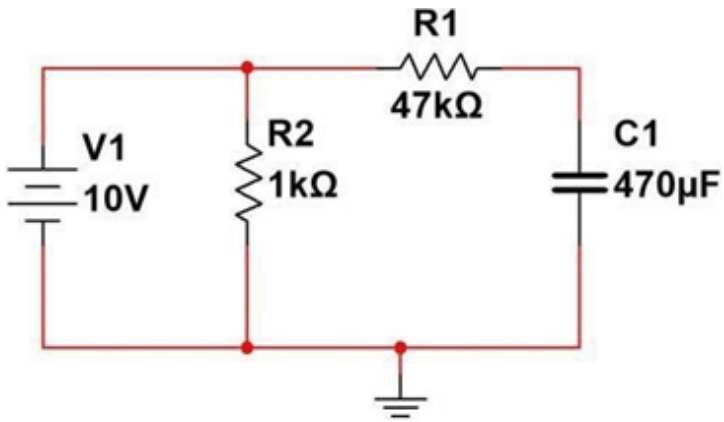


**Figure 1.4**

| | Charging | Discharging |
|---|---|---|
| T | 22.09 | 22.56 |
| $V_C$ Theory | 0-10 | 10-0 |

**Table 1.5**

| Time (sec) | Voltage |
|---|---|
| 0 | 1 |
| 10 | 3 |
| 20 | 4.56 |
| 30 | 5.35 |
| 40 | 5.98 |

| | |
|---|---|
| 50 | 6.45 |
| 60 | 6.88 |
| 70 | 7.2 |
| 80 | 7.54 |
| 90 | 7.77 |
| 100 | 7.99 |
| 110 | 8.18 |
| 120 | 8.36 |
| 130 | 8.51 |
| 140 | 8.64 |
| 150 | 8.75 |

**Table 1.6**

| Time (sec) | Voltage |
|---|---|
| 0 | 9.57 |
| 10 | 6.8 |
| 20 | 4.88 |
| 30 | 3.52 |
| 40 | 2.58 |

| | |
|---|---|
| 50 | 2.02 |
| 60 | 1.50 |
| 70 | 1.16 |
| 80 | 0.89 |
| 90 | 0.69 |
| 100 | 0.55 |
| 110 | 0.40 |
| 120 | 0.35 |
| 130 | 0.29 |
| 140 | 0.242 |
| 150 | 0.20 |

**Table 1.7**

## Conclusion:

During the experimentation, the capacitors and inductors had many deviations from the expected and calculated values. Although these deviations are only a few percents each, they would be significant enough to change voltages and currents if we are using them in more complicated applications that requires accuarcy. For example, the steady state assumption of an inductor is a short circuit, however, the voltage measurement across it reflect that there is a small coil resistance that is more than that of a wire. Thus replacing the inductor with a small resistance instead of a short resulted in more accurate theoretical voltage. We have learned to analyze a capacitor and a inductor in steady state and observed their behaviours.

# Post Lab:

**1- How much does the voltage across C5 and C6 change when the ganged switch is thrown from position 1 to position 2 in Figure 78?**

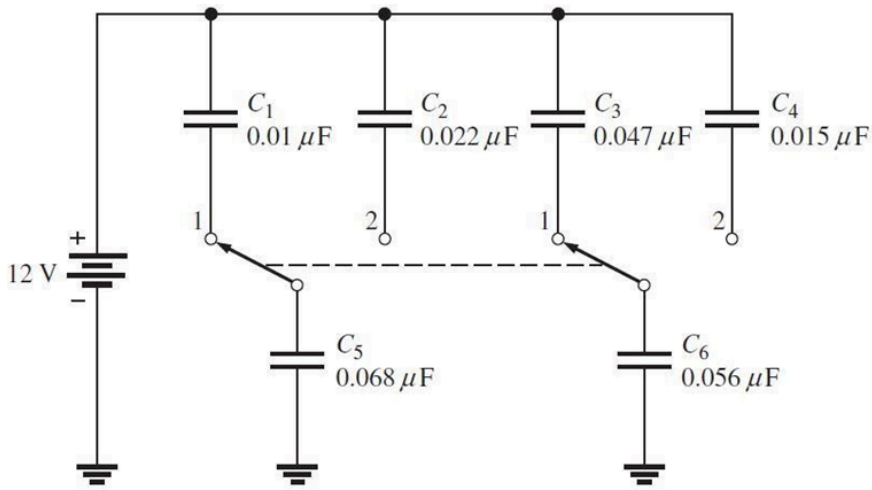


Switch at position 1:

$$V_{C_5} = \frac{\frac{1}{C_5}}{\frac{1}{C_5} + \frac{1}{C_1}} \times 12 = 1.5385\ V$$

$$V_{C_6} = \frac{\frac{1}{C_6}}{\frac{1}{C_6} + \frac{1}{C_3}} \times 12 = 5.4757\ V$$

Switch at position 2:

$$V_{C_5} = \frac{\frac{1}{C_5}}{\frac{1}{C_2} + \frac{1}{C_5}} \times 12 = 2.9333\ V$$

$$V_{C_6} = \frac{\frac{1}{C_6}}{\frac{1}{C_4} + \frac{1}{C_6}} \times 12 = 2.5352\ V$$

$\Delta V_{c5}$ = 1.5385 V - 2.9333 V = -1.3948V

$\Delta V_{c6}$ = 5.4757V - 2.5352V = 2.9405V